RoHS

Mark	ECN NO.	DESCRIPTION	DESIGN	Date:
A	———	New	——	——

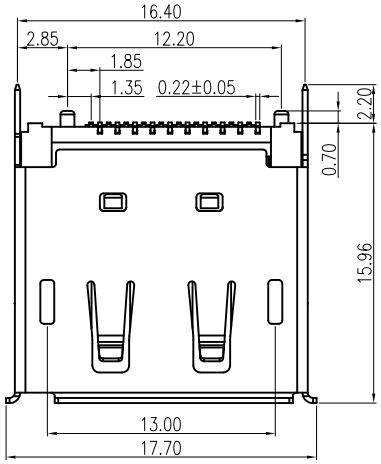

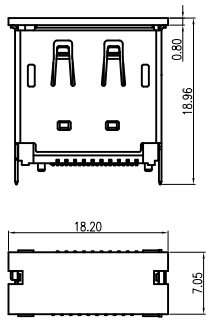

吸取盖示意图
Detail : 1:2

NOTE:
1. Material:
   Housing: LCP,UL94V-0; Color: Black
   Contact: Copper Alloy
   Shell: SUS304
2. FINISH:
   Contact: Au Plated on Contact Area,
   MATTE Tin Plated on Solder Tails,
   Nickel Underplating Over All.
   Shell: Nickel Underplating Over All.
3. Specification:
   3.1: Electrical:
   Contact Current Rating: 0.5A
   Insulation Resistance: 100MΩ Min.
   Contact Resistance: 30 mΩ Max.
   Dielectric Withstanding Voltage: 500V/AC 1Minute

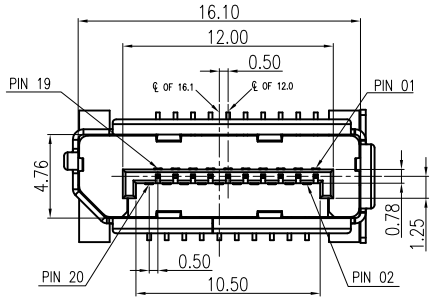

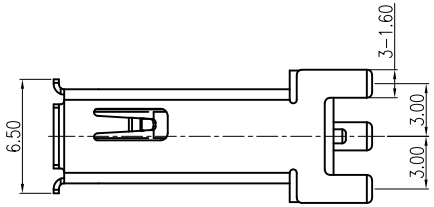

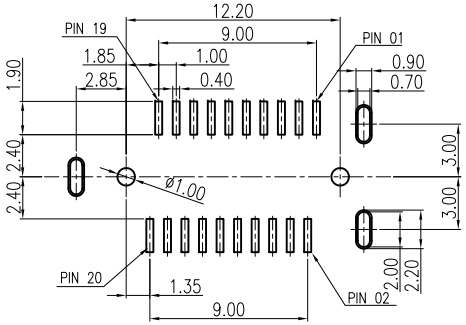

RECOMMEND PCB LAYOUT

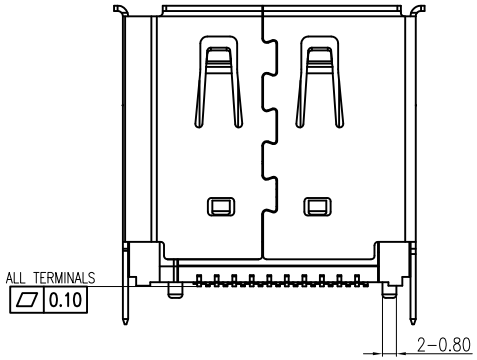

Tolerance					
X.X ±0.30	Model Name:	DP 180度15.96H 双边SMT Molding结构母座 带塑胶双柱 外壳SUS三固定脚 端子平金雾锡G.F			Drawing: PYP
X.XX ±0.25	Model No.:	WLDP-018A			Checked: YSX
X.XXX ±0.15	UNIT:	SCALE:	REVISION:	SHEET:	Approved: Lijian
Angle ±1.0°	mm	FULL	A	1/1	Date: 2016.12.05
	WLCO	深圳市兴万联电子有限公司 SHENZHEN XINGWANLIAN TECHNOLOGY CO, LTD			DWG No.:
					FILE: C