RoHS

Mark	ECN NO.	DESCRIPTION	DESIGN	Date:

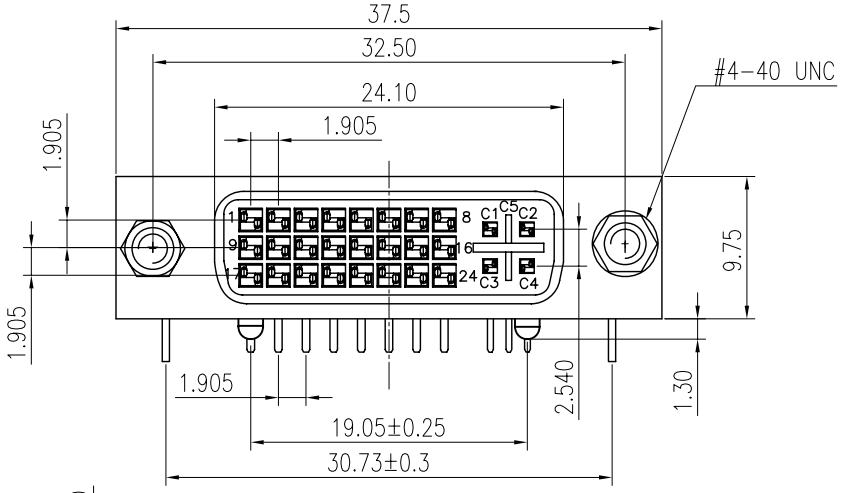

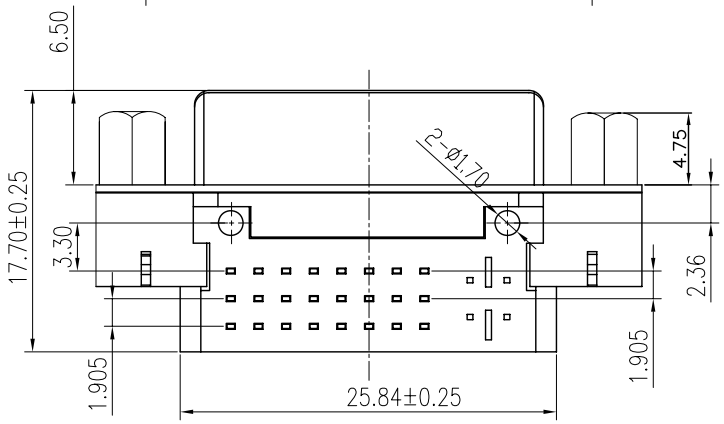

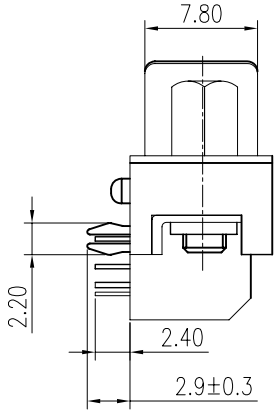

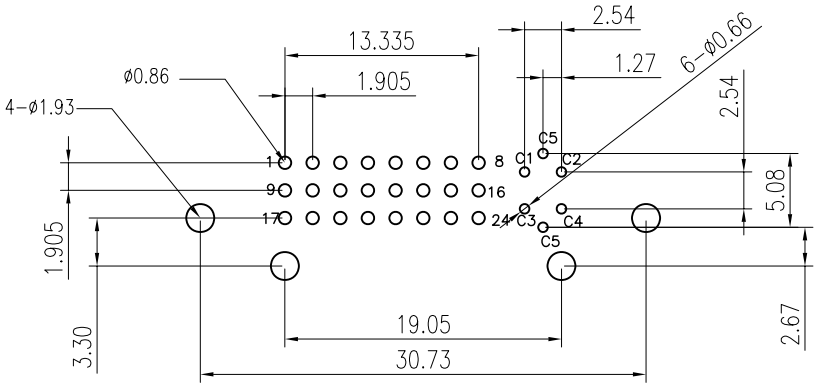

P.C.B LAYOUT(TOP VIEW)

NOTE:

BODY: PBT+30%GF
SPACER: PA66+30%GF
CONTACTS: COPPER ALLOY
CONTACT : COPPER ALLOY
CONTACT : UNDER PLATED 50u"MIN NICKEL,
OVER ALL 120u" MIN TIN IN SOLDERING AREA,
SELECTIVE GOLD PLATED IN CONTACT AREA.
SHIELD : SPCC T=0.5
SHIELD : NICKEL PLATED WITH 120u"THICK.
OVER 100u" THICKNESS Cu.
BOARD LOCK:SPCC ,Tin PLATED.
RIVET : COPPER ALLOY , NICKEL PLATED.
SCREW : Fe,NICKEL PLATED.

*MECHANICAL
MATING FORCE: 4.5 KG MAX. 25 MM/MINUTE
UNMATING FORCE: 1.0-4.0 KG MIN.
DURABILITY: 100 MATING CYCLES

*ELECTRICAL SPECFICATION
INSULATION RESISTANCE: 1000 MEGOHMS MIN
DIELECTRIC WITHSTANDING VOLTAGE: 500V ACRMS±50V.60 HZ
CURRENT RATING: 1.5 AMPERES MIN

*ENVIRONMENTAL
OPERRATING TEMPERATURE: -20℃ to 85℃

Tolerance	Model Name: DVI24+5铆加锁（青铜）4.75螺丝				Drawing: Zengling
X.X ±0.25 X.XX ±0.15 X.XXX ±0.10 Angle ±2.0°	Model No: WLDV-029A				Checked: Lijian
	UNIT:	SCALE:	REVISION:	SHEET	Approved: WEI JI YANG
	mm	FULL	A1	1/1	Date: 2011.08.23
	WLCO 深圳市兴万联电子有限公司 SHENZHEN XINGWANLIAN TECHNOLOGY CO,LTD				DWG NO.
					FILE: C